Unit-5 (Servlets and JSP)

Servlets: Servlet Overview and Architecture, Interface Servlet and the Servlet Life Cyc le, HandlingHTTP get Requests, Handling HTTP post Requests, Redirecting Requests t o Other Resources, Session Tracking, Cookies, Session Tracking with HttpSession

JavaServer Pages (JSP): Introduction, JavaServer Pages Overview, A First JavaServer Page Example, Implicit Objects, Scripting, Standard Actions, Directives, Custom Tag Libraries..

Servlet Overview and Architecture

Servlets are the Java programs that runs on the Java-enabled web server or application server. They are used to handle the request obtained from the web server, process the request, produce the response, then send response back to the web server.

Properties of Servlets :

- Servlets work on the server-side.
- Servlets are capable of handling complex requests obtained from web server.

Execution of Servlets :

Execution of Servlets involves six basic steps:

1. The clients send the request to the web server.
2. The web server receives the request.
3. The web server passes the request to the corresponding servlet.
4. The servlet processes the request and generates the response in the form of output.
5. The servlet sends the response back to the web server.
6. The web server sends the response back to the client and the client browser displays it on the screen.

Servlet Architecture

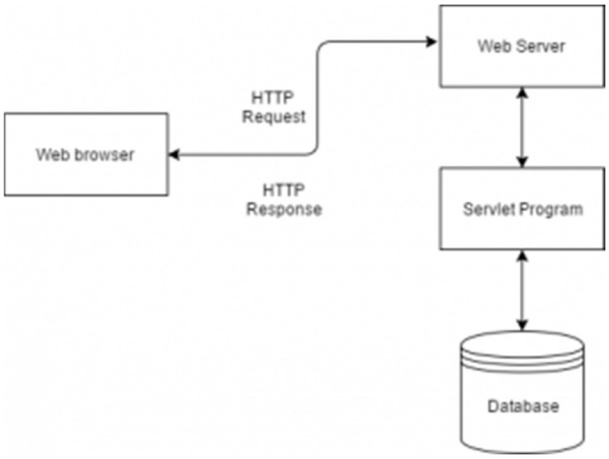

The **server-side extensions** are nothing but the technologies that are used to create dynamic Web pages. Actually, to provide the facility of dynamic Web pages, Web pages need a container or Web server. To meet this requirement, independent Web server providers offer some proprietary solutions in the form of **APIs**(Application Programming Interface).

These **APIs** allow us to build programs that can run with a Web server. In this case , **Java Servlet** is also one of the component APIs of **Java Platform Enterprise Edition** which sets standards for creating dynamic Web applications in Java.

CGI technology enables the web server to call an external program and pass HTTP request information to the external program to process the request. For each request, it starts a new process.

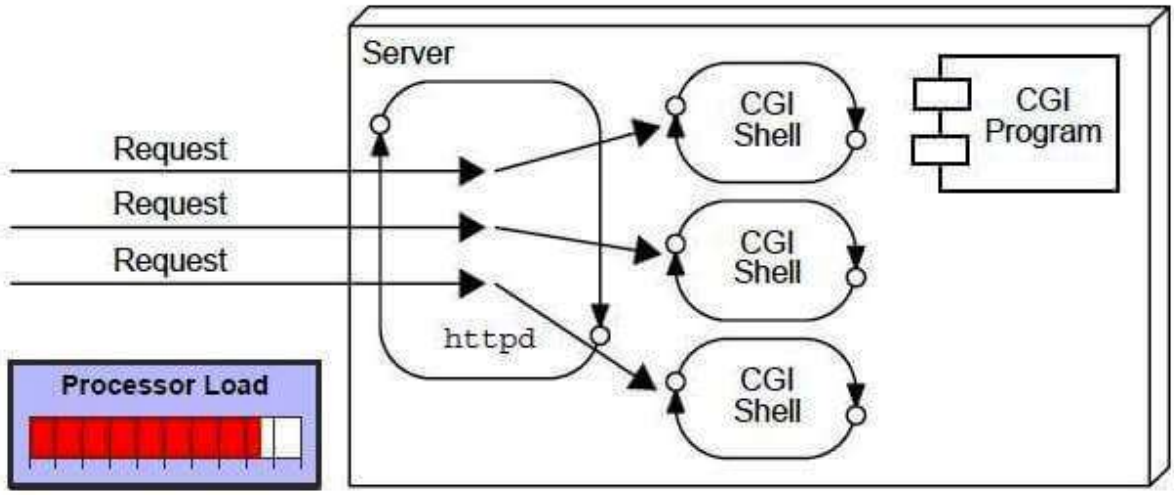

Disadvantages of CGI

There are many problems in CGI technology:

1. If the number of clients increases, it takes more time for sending the response.
2. For each request, it starts a process, and the web server is limited to start processes.
3. It uses platform dependent language e.g. C, C++, perl.

Advantages of Servlet

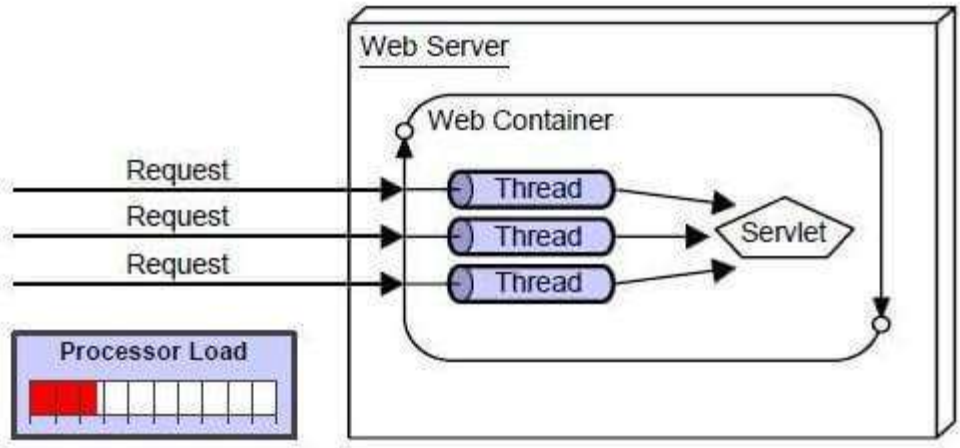

There are many advantages of Servlet over CGI. The web container creates threads for handling the multiple requests to the Servlet. Threads have many benefits over the Processes such as they share a common memory area, lightweight, cost of communication between the threads are low. The advantages of Servlet are as follows:

1. **Better performance:** because it creates a thread for each request, not process.
2. **Portability:** because it uses Java language.
3. **Robust:** JVM manages Servlets, so we don't need to worry about the memory leak, garbage collection, etc.
4. **Secure:** because it uses java language.

Interface Servlet

1. Servlet Interface
2. Methods of Servlet interface

Servlet interface provides common behavior to all the servlets. Servlet interface defines methods that all servlets must implement.

Servlet interface needs to be implemented for creating any servlet (either directly or indirectly). It provides 3 life cycle methods that are used to initialize the servlet, to service the requests, and to destroy the servlet and 2 non-life cycle methods.

Methods of Servlet interface

There are 5 methods in Servlet interface. The init, service and destroy are the life cycle methods of servlet. These are invoked by the web container.

Method	Description
public void init(ServletConfig config)	initializes the servlet. It is the life cycle method of servlet and invoked by the web container only once.

public void service(ServletRequest request,ServletResponse response)	provides response for the incoming request. It is invoked at each request by the web container.
public void destroy()	is invoked only once and indicates that servlet is being destroyed.
public ServletConfig getServletConfig()	returns the object of ServletConfig.
public String getServletInfo()	returns information about servlet such as writer, copyright, version etc.

Servlet Life Cycle

A servlet life cycle can be defined as the entire process from its creation till the destruction. The following are the paths followed by a servlet.

- The servlet is initialized by calling the **init()** method.
- The servlet calls **service()** method to process a client's request.
- The servlet is terminated by calling the **destroy()** method.
- Finally, servlet is garbage collected by the garbage collector of the JVM.

Now let us discuss the life cycle methods in detail.

The init() Method

The init method is called only once. It is called only when the servlet is created, and not called for any user requests afterwards. So, it is used for one-time initializations, just as with the init method of applets.

The servlet is normally created when a user first invokes a URL corresponding to the servlet, but you can also specify that the servlet be loaded when the server is first started.

When a user invokes a servlet, a single instance of each servlet gets created, with each user request resulting in a new thread that is handed off to doGet or doPost as appropriate. The init() method simply creates or loads some data that will be used throughout the life of the servlet.

The init method definition looks like this −

```
public void init() throws ServletException {
  // Initialization code...
}
```

The service() Method

The service() method is the main method to perform the actual task. The servlet container (i.e. web server) calls the service() method to handle requests coming from the client(browsers) and to write the formatted response back to the client.

Each time the server receives a request for a servlet, the server spawns a new thread and calls service. The service() method checks the HTTP request type (GET, POST, PUT, DELETE, etc.) and calls doGet, doPost, doPut, doDelete, etc. methods as appropriate.

Here is the signature of this method −

```
public void service(ServletRequest request, ServletResponse response)
  throws ServletException, IOException {
}
```

The service () method is called by the container and service method invokes doGet, doPost, doPut, doDelete, etc. methods as appropriate. So you have nothing to do with service() method but you override either doGet() or doPost() depending on what type of request you receive from the client.

The doGet() and doPost() are most frequently used methods with in each service request. Here is the signature of these two methods.

The doGet() Method

A GET request results from a normal request for a URL or from an HTML form that has no METHOD specified and it should be handled by doGet() method.

```
public void doGet(HttpServletRequest request, HttpServletResponse response)
  throws ServletException, IOException {
  // Servlet code
}
```

The doPost() Method

A POST request results from an HTML form that specifically lists POST as the METHOD and it should be handled by doPost() method.

```
public void doPost(HttpServletRequest request, HttpServletResponse response)
  throws ServletException, IOException {
  // Servlet code
}
```

The destroy() Method

The destroy() method is called only once at the end of the life cycle of a servlet. This method gives your servlet a chance to close database connections, halt background threads, write cookie lists or hit counts to disk, and perform other such cleanup activities.

After the destroy() method is called, the servlet object is marked for garbage collection. The destroy method definition looks like this −

```
public void destroy() {
  // Finalization code...
}
```

Architecture Diagram

The following figure depicts a typical servlet life-cycle scenario.

- First the HTTP requests coming to the server are delegated to the servlet container.
- The servlet container loads the servlet before invoking the service() method.
- Then the servlet container handles multiple requests by spawning multiple threads, each thread executing the service() method of a single instance of the servlet.

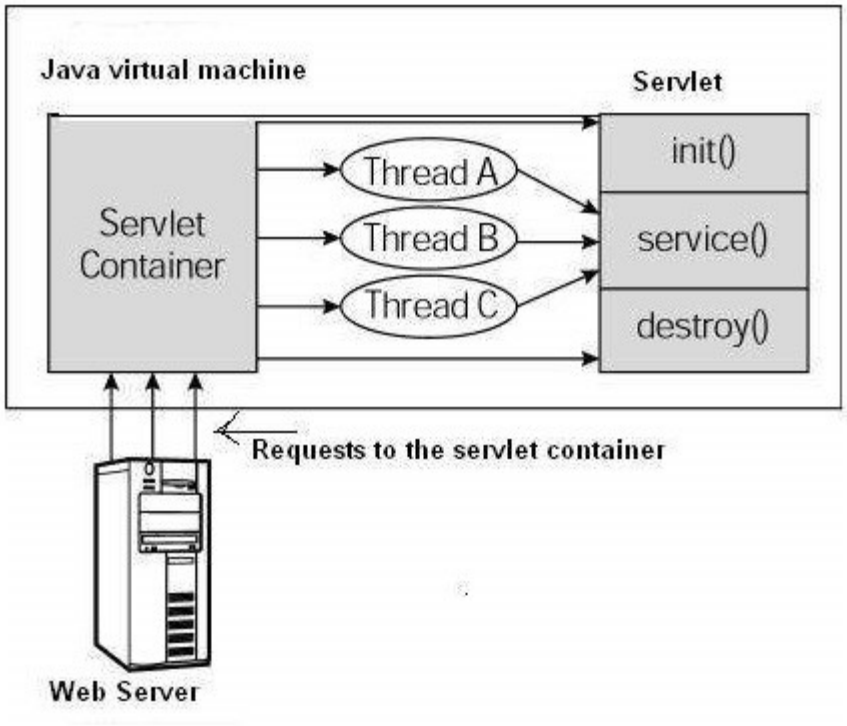
Java virtual machine
Servlet
Servlet Container
Thread A
Thread B
Thread C
init()
service()
destroy()
Requests to the servlet container
Web Server